JONESCO

THE 95M WHEELED FIRST AID RESPONSE BOX

TECHNICAL DATA - 05/2026-v01

FIRST AID STORAGE
ENGINEERED FOR RAPID RESPONSE

Key Features

- Mobile storage ideal for a variety of first aid kits, i.e. trauma kits, bleed kits, critical injury kits, mass evacuation kits, burns kits, biohazard kits, and eyewash kits
- Suitable for venues seeking to comply with Martyn's Law (Terrorism Act 2025)
- Durable roto-moulded UV-stabilised polyethylene design - thick-walled, impact-resistant, and corrosion-proof
- A UV-blocking polycarbonate window for easy inspection
- Buckle and webbing strap to secure first aid equipment
- Two toggle latches with split pins guarantee secure door closure
- Fitted with an automotive-grade synthetic rubber seal for protection against water and dust ingress
- Comes with removeable shelf as standard
- Large 200 mm diameter solid synthetic rubber wheels for easy movement
- Door opens to the left
- Especially valuable on large, sprawling sites

Specification

Part number:	JBWA95MF
Dimensions (H x W x D):	1000 x 540 x 345 mm
Internal dimensions (H x W x D):	915 x 360 x 195 mm
Weight:	10.25 kg (9.5 kg without shelf)
Material:	LLDPE
Pallet quantity / dimensions:	18 / 1915 x 1320 x 1100 mm

THE 95M
WHEELED FIRST AID RESPONSE BOX
TECHNICAL DATA

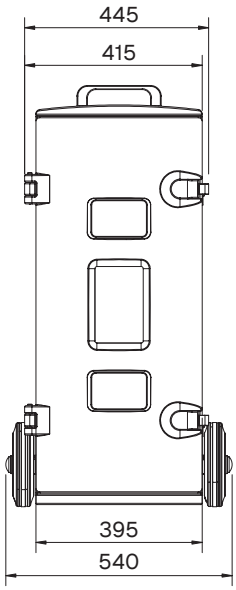

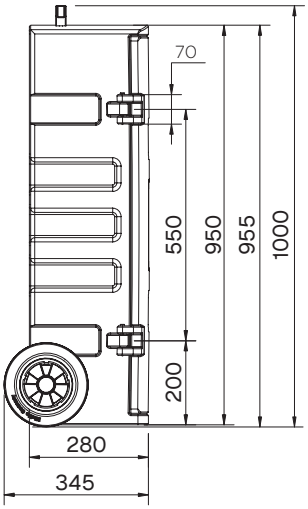

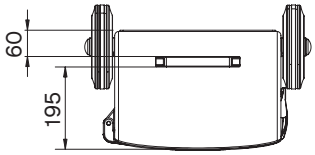

SHELF

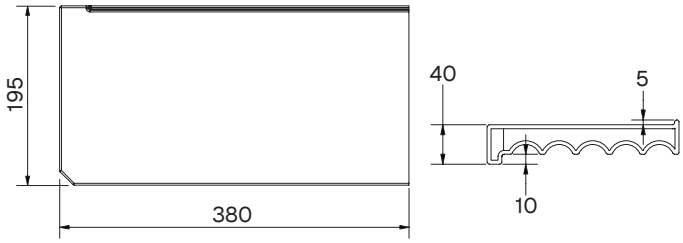

PALLETISATION

Pallet quantity:	18
Pallet dimensions:	1915 x 1320 x 1100 mm
20' container:	144
40' high cube container:	324
13.6 m trailer:	260

The information provided is, to the best of our knowledge, true and accurate; however, all recommendations or suggestions are made without guarantee and may change based on shipping requirements.

Estimated container and trailer quantities for this product may not fully utilise available space due to the product's shape and structural configuration.

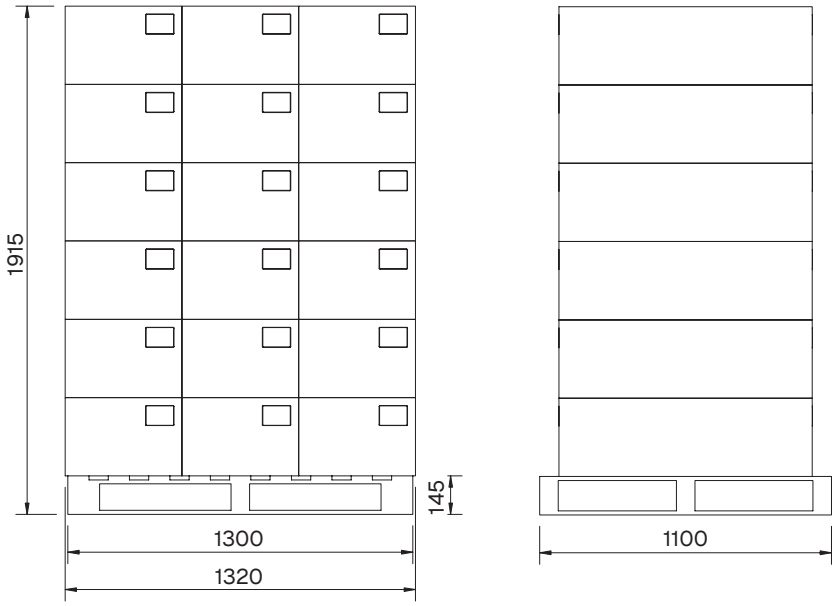

THE 95M
WHEELED FIRST AID RESPONSE BOX
ASSEMBLY INSTRUCTIONS

JONESCO

COMPONENTS

- Axle
- 2 x wheels
- 2 x caps
- Handle
- 2 x bolts
- 2 x washers

TOOLS REQUIRED

- Rubber mallet
- 13 mm socket / spanner
- 4 mm allen key

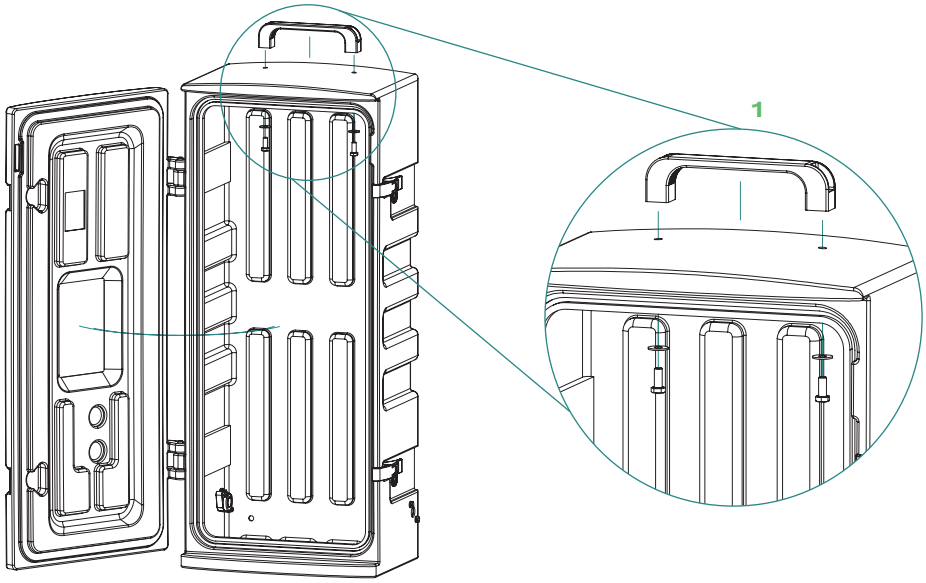

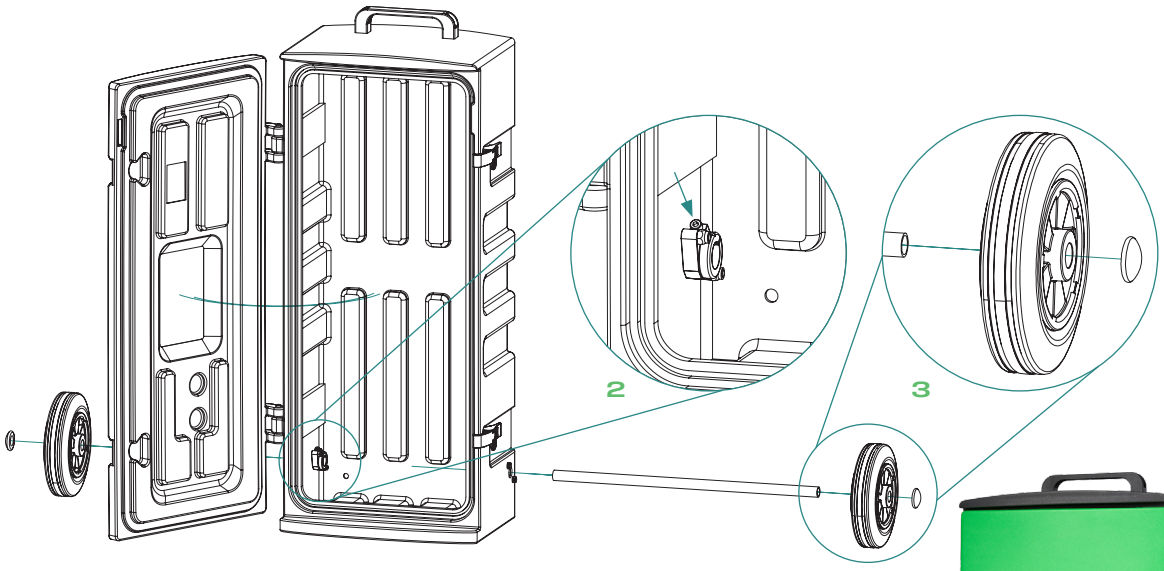

ASSEMBLY STEPS

1. Align the handle with the pre-drilled holes and affix using the supplied M8 bolts and washers
2. Insert the axle through the pre-drilled holes. Once in place secure with allen key by tightening the top bolts on the metal clamps inside
3. Place a wheel at each end of the axle. Then, using a rubber mallet, hammer the metal caps over the ends of the axle to secure the wheels in place