JONESCO

THE 85 FIRST AID STORAGE BOX

TECHNICAL DATA - 05/2026-v01

FIRST AID STORAGE
ENGINEERED FOR RAPID RESPONSE

Key Features

- Compliant storage for a variety of first aid kits, i.e. trauma kits, bleed kits, critical injury kits, mass evacuation kits, burns kits, biohazard kits, and eyewash kits
- Durable roto-moulded UV-stabilised polyethylene design - thick-walled, impact-resistant, and corrosion-proof
- Suitable for venues seeking to comply with Martyn's Law (Terrorism Act 2025)
- Flexible mounting on internal/external walls
- Use as a free-standing model with KIT52, which includes 4 synthetic rubber feet
- Designed for use by zero responders, first aiders and professionals alike
- Fitted with an automotive-grade synthetic rubber seal giving water and dust ingress protection
- Two UV-blocking polycarbonate windows for easy inspection
- Comes with removeable shelves as standard (KITSHELF85)
- Key-operated T-handle with rotating lock
- Supplied with first aid labels

Specification

Part number:	JBDA85F
Dimensions (H x W x D):	850 x 565 x 375 mm
Internal dimensions (H x W x D):	775 x 490 x 280 mm
Weight:	14.3 kg (12 kg without shelves)
Material:	LLDPE
Pallet quantity / dimensions:	14 / 2045 x 1300 x 1160 mm

THE 85
FIRST AID STORAGE BOX
TECHNICAL DATA

JONESCO

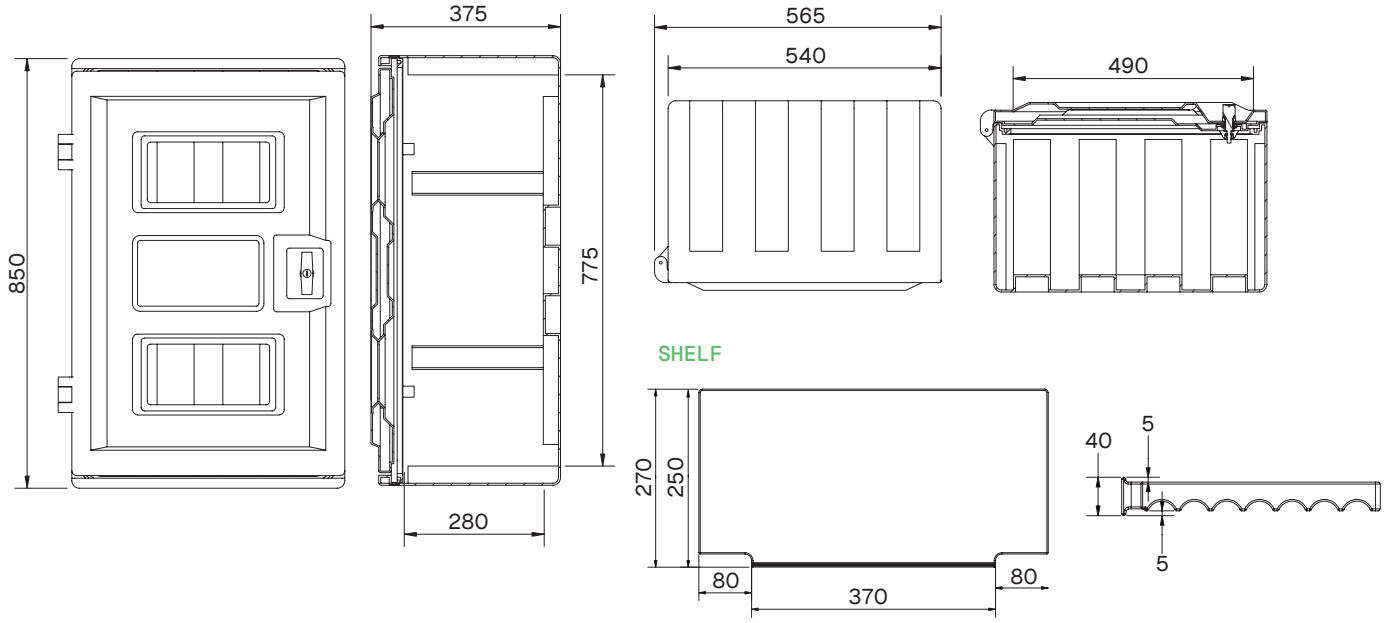

PALLETISATION

Pallet quantity:	14
Pallet dimensions:	2045 x 1300 x 1160 mm
20' container:	96
40' high cube container:	216
13.6 m trailer:	264

The information provided is, to the best of our knowledge, true and accurate; however, all recommendations or suggestions are made without guarantee and may change based on shipping requirements.

Estimated container and trailer quantities for this product may not fully utilise available space due to the product's shape and structural configuration.

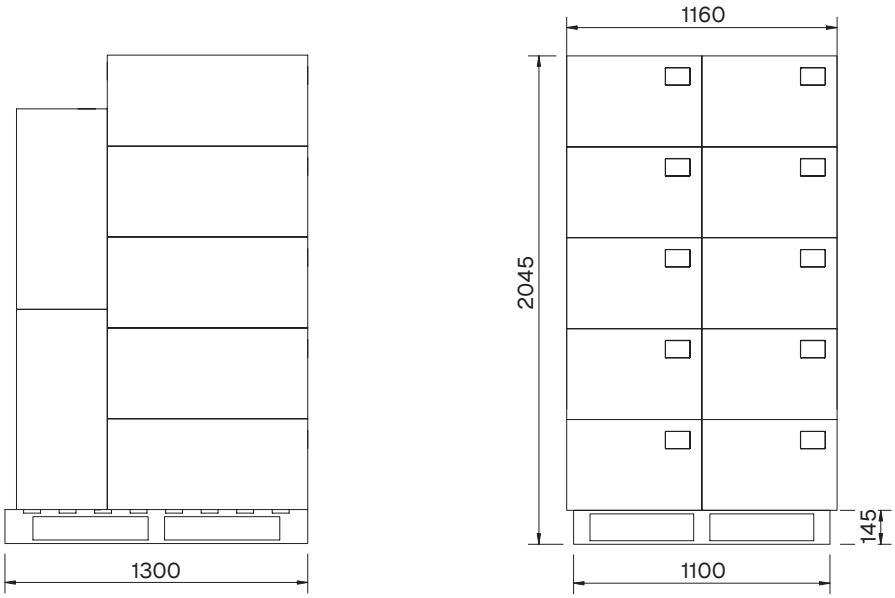

THE 85
FIRST AID STORAGE BOX
MOUNTING INSTRUCTIONS

JONESCO

IMPORTANT

Fixings not supplied

Select fixings suitable for:

- Wall type (brick, block, plasterboard, timber)
- Intended load (including contents)

Use washers under all fixing heads

Minimum 4 fixing points required

For heavier loads: use additional fixings or load-rated anchors

TOOLS REQUIRED

Drill & suitable drill bit

Screwdriver / socket tool

Level

Pencil / marker

Appropriate fixings & wall plugs

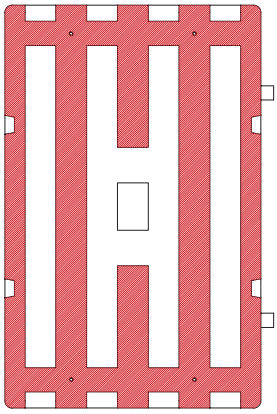

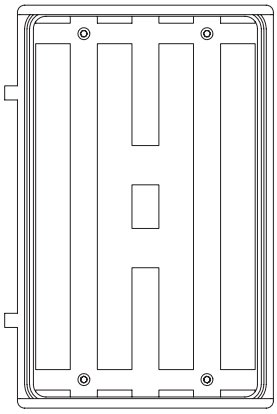

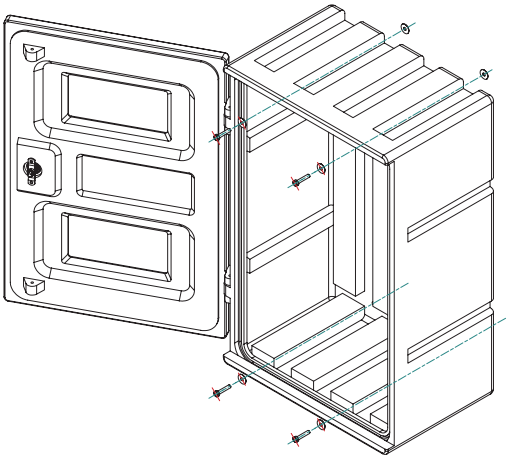

Fig. 1

Red areas indicate approved drilling locations

Fig. 2 & 3

Fixings installed from inside the box

MOUNTING STEPS

1. Position: Select a structurally sound wall with clear access for door opening
2. Mark Out: Hold the box in position and mark fixing points using approved drilling locations. (See Fig. 1)
3. Drill Holes: Drill at marked positions. Fit wall plugs/anchors as required
4. Align Unit: Place box against wall, aligning holes with drilled positions
5. Secure Fixings: Install fixings from inside the box. Fit washers under heads. (See Fig. 2 & 3)
6. Tighten Evenly: Ensure all fixings are secure and load is evenly distributed
7. Final Check: Load box and confirm stability. Add fixings if required
8. Safety Note: Incorrect fixing selection or installation may result in failure. Always ensure fixings are appropriate for the wall structure and applied load